# WS7.0 Position Sensor with Absolute or Incremental Encoder

## Compact Industrial Sensor for Long Ranges

- **Measurement Range:**
  **0 ... 3750 mm to 0 ... 40000 mm**
  **0 ... 147.6 in to 0 ... 1574.8 in**
- **With Absolute or Incremental Encoder Output**


| | | |
|---|---|---|
| **Specifications** | Outputs | Incremental Encoder |
| | | Absolute Multiturn Encoder with synchronous serial output TSSI / RS-485 |
| | Resolution | Incremental: 1, 5 or 10 pulses per mm;<br>25.4, 127 or 254 pulses per in<br>TSSI: 0.073 mm up to 30000 mm range<br>0.088 mm up to 40000 mm range<br>TSSI-P: 0.037 mm up to 30000 mm range<br>0.044 mm up to 40000 mm range |
| | Material | Aluminium and Stainless Steel<br>Cable: Stainless Steel |
| | Sensing device | Incremental or Absolute Encoder |
| | Linearity | Up to ±0.05 % F.S., optional ±0.01 % F.S. |
| | Weight | Up to 4 kg max. |
| | Environmental | |
| | Immunity to Interference (EMC) | Refer to Output Specification |
| | Temperature | Refer to Output Specification |

**Order code WS7.0**
**Absolute/Incremental**

**WS7.0** – ☐ – ☐ – ☐ – ☐ – ☐

**Model Name**

**Measurement Range (in mm)**
3750 / 5000 / 7500 / 10000 / 15000 / 20000 / 25000 / 30000 / 40000

**Pulses per mm for Incremental Output PP530**
10 = 10 Pulses per mm; 254 pulses per in
5 = 5 Pulses per mm; 127 pulses per in
1 = 1 Pulse per mm; 25.4 pulses per in (not in the 40000 mm range)

**Outputs**
ME = Mechanism only for installation of suitable multiturn encoders
PP530 = Incremental output
TSSI = Multiturn encoder with synchronous serial output
TSSI-P = TSSI prgrammable, RS232C, incremental signals
Other Outputs on Request (Interbus S, Profibus, CAN-Bus)

**Linearity**
L01 = ±0.01 %, related to the specified sensitivity on the label (PP530)

**Option**
M4 = M4 cable fixing

**Order Code Mating Conn**. (see accessories p. 105) **WS-CONN-D8** **TSSI(-P):** **WS-CONN-017S-M**

**Order Example: WS7.0 - 30000 - 5 - PP530 - M4**

# WS7.0 Position Sensor with Absolute or Incremental Encoder

| Cable Forces typical at 20 °C | Range [mm] | Range [in] | Maximum Pull-out Force [N] | Minimum Pull-in Force [N] |
|---|---|---|---|---|
| | 3750 - 30000 | 147.6 - 1181.1 | 8.0 | 4.2 |
| | 40000 | 1574.8 | 7.0 | 3.4 |

## Outline drawing

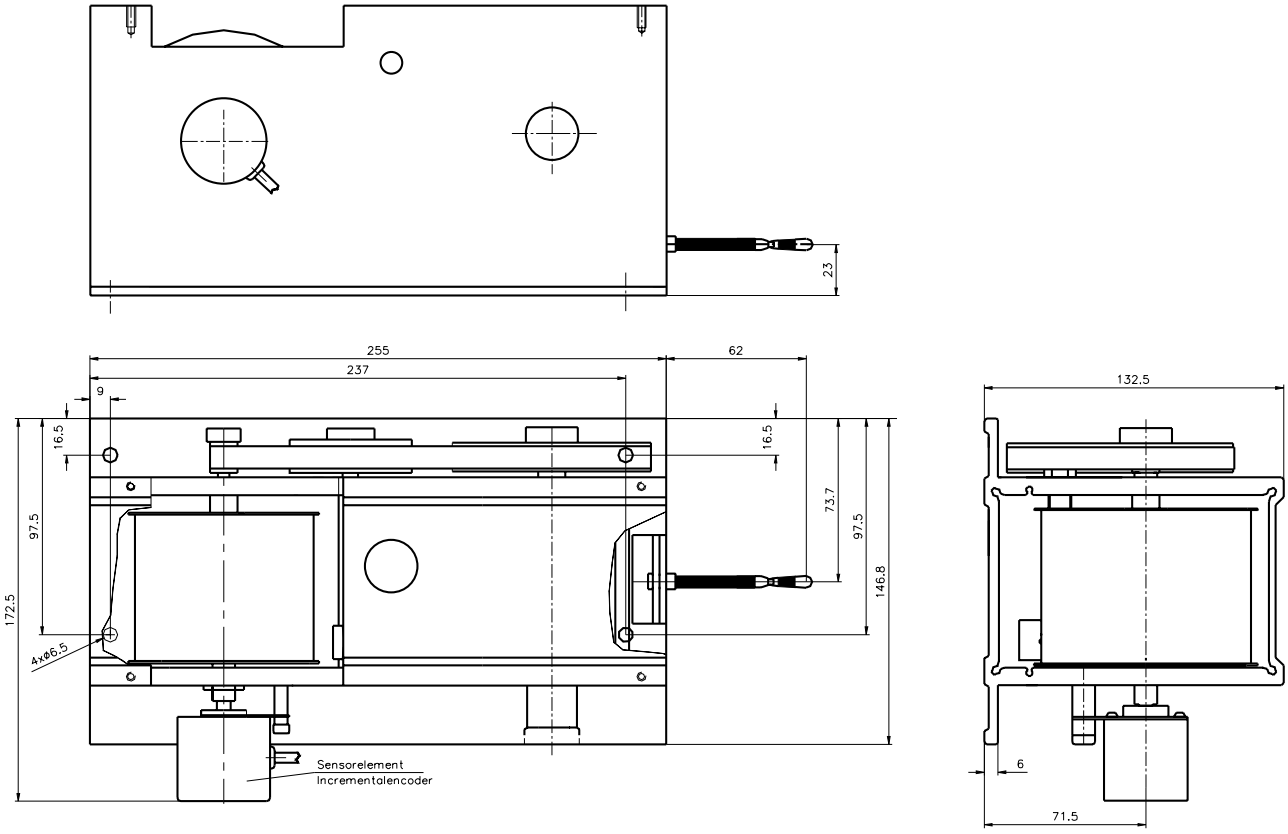


For guaranteed dimensions consult factory

# WS Position Sensors
# Output Specification PP530

| **Signal Conditioner PP530** Incremental | | |
|---|---|---|
| | Excitation Voltage | +5 ... +30 VDC |
| | Excitation Current | 200 mA max. |
| | Output Frequency | 200 kHz max. |
| | Output | Linedriver, Push-Pull, CMOS, TTL and HTL compatible |
| | Output Current | 30 mA max., Short Circuit Protection |
| | Output Voltage | Depends on the excitation voltage (e.g. to obtain TTL-signals the excitation must be 5 V) Compatible to EIA RS-422/RS-485 |
| | Stability (Temperature) | ±0.002% / K Full Scale (sensor mechanism) |
| | Operation Temperature | -10 ... +70 °C |
| | Storage Temperature | -30 ... +80 °C |
| | Transition Time Positive Edge | 250 ns |
| | Transition Time Negative Edge | 250 ns |
| | Protection | Reverse Polarity, Permanent Short Circuit |
| | Immunity to Interference (EMC) | According to EN61326: 1998 |

**Signal Diagram**

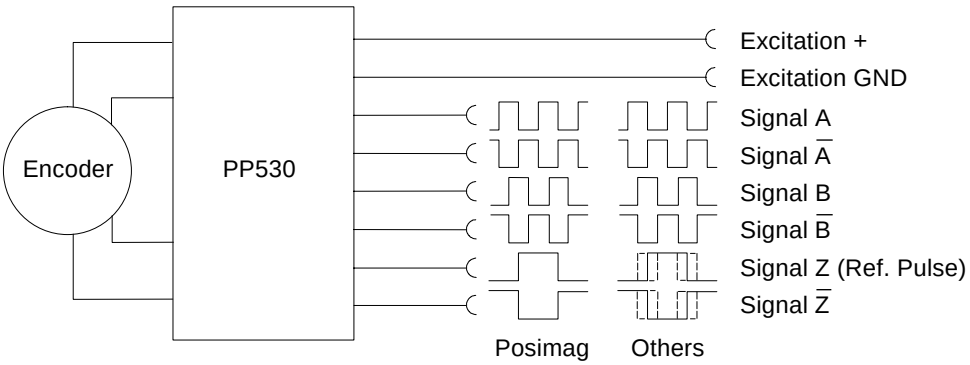


**Recommended Processing Circuit**

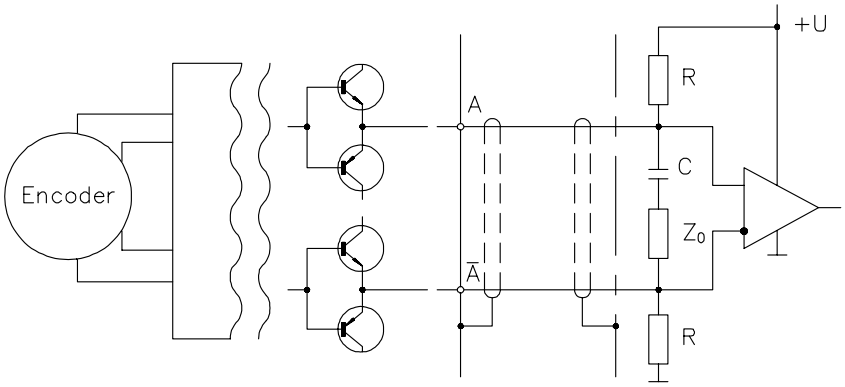


| **Signal Levels** | Excitation | Level | Ia ≤ 5 mA | Ia ≤ 25 mA | -Ia ≤ 5 mA | -Ia ≤ 25 mA |
|---|---|---|---|---|---|---|
| | 5 V | $Ua_{High}$ | >4.2 V | >4.2 V | >4.1 V | >3.8 V |
| | 5 V | $Ua_{Low}$ | <0.5 V | <1.2 V | <0.4 V | <0.4 V |
| | 24 V | $Ua_{High}$ | >23.5 V | >23.5 V | >23.5 V | >22.5 V |
| | 24 V | $Ua_{Low}$ | <0.5 V | <1.2 V | <0.4 V | <0.4 V |

| **Signal Wiring / Connection** | Output Signals PP530 | Connector WS-CONN-D8 |
|---|---|---|
| | Excitation + | 1 |
| | Excitation GND (0V) | 2 |
| | Signal B (A + 90°) | 3 |
| | Signal A | 4 |
| | Signal $\overline{B}$ | 5 |
| | Signal $\overline{A}$ | 6 |
| | Signal Z (Ref. Pulse) | 7 |
| | Signal $\overline{Z}$ | 8 |

Mating connector
View to solder terminals

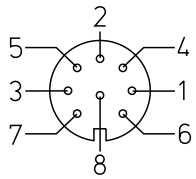


WS-CONN-D8

# WS Position Sensors
# Output Specification TSSI

- **4096 counts per revolution (12 bit), 4096 revolutions (12 bit)**
- **No Loss of Data at Power-down**
- **Easy to Connect to PLC's with SSI Input Circuit**

**Description**

The sensing device of the SSI is a 24-bit absolute multiturn encoder. The position information is given by an analog/digital converter output serialized as a data word. The processing unit (PLC, Microcomputer) sends pulse sequences which clocks the data transmission at the required transfer rate. With the first falling edge of the pulse sequence the position of the sensor is recorded and stored. The following rising edges control the bit-by-bit transmission of the data word. After a delay time the next new position information

**Data Format**
(Train of 26 pulses)

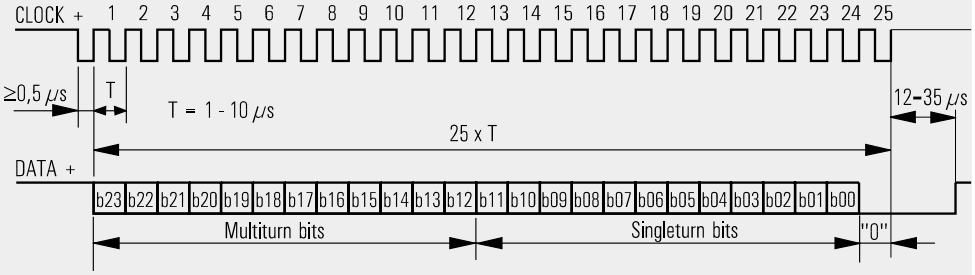


**Signal Conditioner TSSI**
Absolute Encoder synchronous serial

| | |
|---|---|
| Output | EIA RS-422, RS-485, short-circuit proof |
| Excitation Voltage | 10 ... 30 V DC, reverse polarity protected |
| Excitation Current | 250 mA max. without load |
| Clock Frequency | 100 kHz ... 1 MHz |
| Code | Gray, continuous progression |
| Format | Tannenbaum |
| Delay between Pulse Trains | 12 to 35 µs |
| Stability (Temperature) | ±0.002% / K Full Scale (sensor mechanism) |
| Operation Temperature | -20 ... +85 °C |
| Immunity to Interference (EMC) | According to EN50082-2, EN50081-1 |

**Recommended Processing Input Circuit**

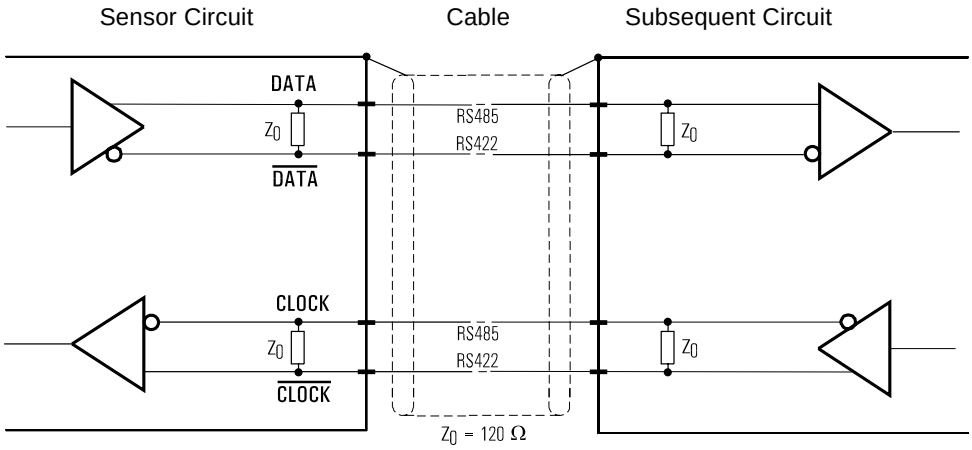


| Cable Length | Baud Rate |
|---|---|
| 50 m | 100 … 1000 kHz |
| 100 m | 100 … 300 kHz |

**Note:**
Extension of the cable length will reduce the maximum transmission rate.
The signals CLOCK/$\overline{\text{CLOCK}}$ and DATA/$\overline{\text{DATA}}$ must be connected in a twisted pair cable, shielded per pair and common.

**Signal Wiring / Connection**

| Signal Name | Cable Output (*) | Connector Pin |
|---|---|---|
| Excitation + | white | 7 |
| Excitation GND (0V) | brown | 10 |
| CLOCK | green | 8 |
| $\overline{\text{CLOCK}}$ | yellow | 9 |
| DATA | grey | 14 |
| $\overline{\text{DATA}}$ | pink | 17 |

(*) WS7.2 only

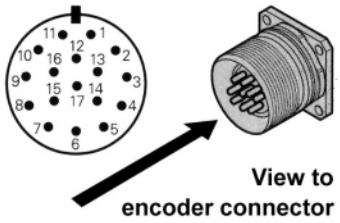

# WS Position Sensors
# Output Specification TSSI-P

- **8192 counts per revolution (13 bit), 4096 revolutions (12 bit)**
- **Encoder programming and data transfer via RS-232 interface**
- **In addition sinusoidal incremental signals**

## Description

The sensing device of the SSI is a 25-bit absolute multiturn encoder. The position information is given by an analog/digital converter as a serial data word. The processing unit (PLC, Microcomputer) sends pulse sequences which clocks the data transmission at the required transfer rate. With the first falling edge of the pulse sequence the position of the sensor is recorded and stored. The following rising edges control the bit-by-bit transmission of the data word. After a delay time the next new position information will be transmitted.

## Data Format
(Train of 26 pulses)

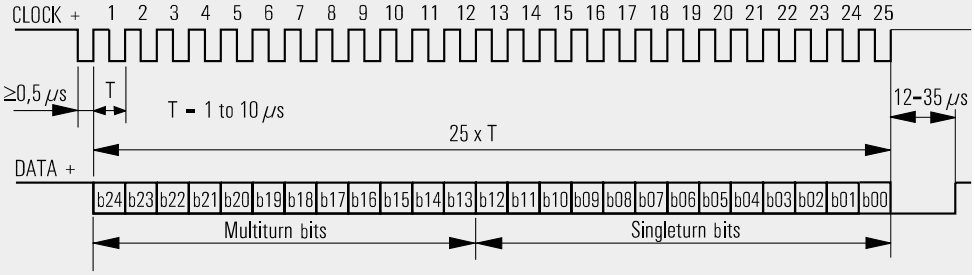


## Signal Conditioner TSSI
Absolute Encoder synchronous serial, programmable

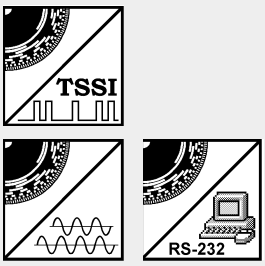


| | |
|---|---|
| Output | EIA RS-422, RS-485, short-circuit proof |
| Excitation Voltage | 10 ... 30 V DC, reverse polarity protected |
| Excitation Current | 250 mA max. without load |
| Clock Frequency | 100 kHz ... 1 MHz |
| Programmable Functions | Resolution, Offset, Preset, Counting Direction, Output Code and Format |
| Code | Gray or Binary |
| Format | Tannenbaum (SSI) or Serial, right aligned |
| Delay between Pulse Trains | 12 to 35 µs |
| Incremental Signal | Two sinusoidal quadrature signals A and B, each with 512 periods per revolution. Signal amplitude approx. 1 $V_{SS}$ with 120 Ω terminating resistance |
| Serial Interface | RS-232C asynchronous (TxD, RxD, GND) for encoder programming and data transmission |
| Hardware Programming | Preset1, Preset2, Counting Direction |
| Stability (Temperature) | 002% / K Full Scale (sensor mechanism) |
| Operation Temperature | -20 ... +85 °C |
| Immunity to Interference (EMC) | According to EN50082-2, EN50081-1 |

## Signal Wiring / Connection

| Signal Name | Connector Pin |
|---|---|
| Excitation + | 7 |
| Excitation GND (0V) | 10 |
| CLOCK | 8 |
| $\overline{\text{CLOCK}}$ | 9 |
| DATA | 14 |
| $\overline{\text{DATA}}$ | 17 |
| Signal A | 15 |
| Signal $\overline{\text{A}}$ | 16 |
| Signal B | 12 |
| Signal $\overline{\text{B}}$ | 13 |
| Internal shield | 11 |
| RxD | 1 |
| TxD | 4 |
| Fault detection signal $\overline{\text{UaS}}$ | 3 |
| Preset1 | 5 |
| Preset2 | 6 |
| Counting direction | 2 |

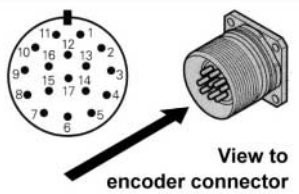


Programming Software and Connector Cable see page 104.

**Recommended Processing Input Circuit**

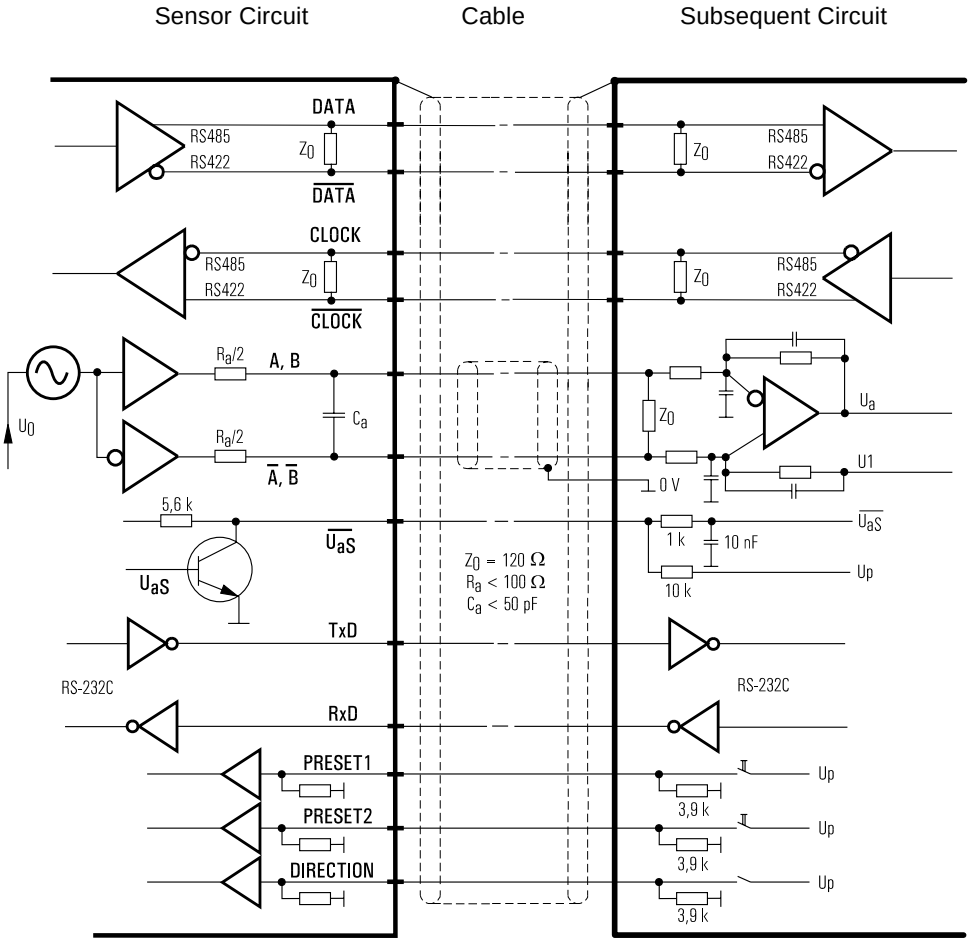


| Cable Length | Baud Rate |
|---|---|
| 50 m | 100 … 1000 kHz |
| 100 m | 100 … 300 kHz |

**Note:**
Extension of the cable length will reduce the maximum transmission rate.
The signals CLOCK/$\overline{\text{CLOCK}}$ and DATA/$\overline{\text{DATA}}$ must be connected in a twisted pair cable, shielded per pair and common.

**Incremental Signals**